AIR-BRIDGE - PLAN 2: DETAILED VIEW OF THE AIR-BRIDGE ANCHORING SYSTEM

DETALLE 1

DETALLE PIEZA DE CONEXIÓN TABLERO – ESLINGA
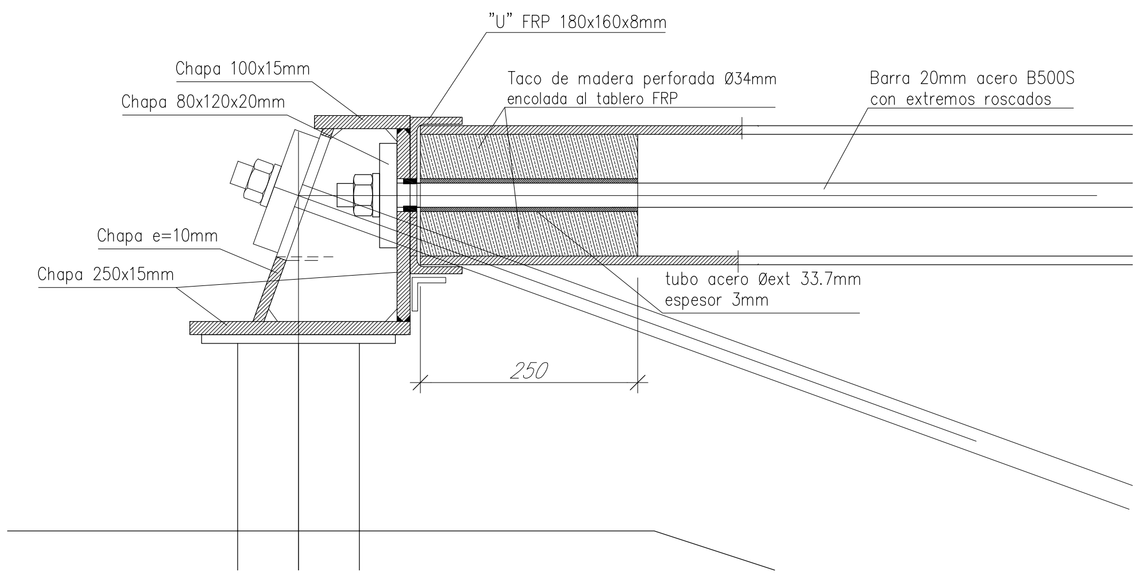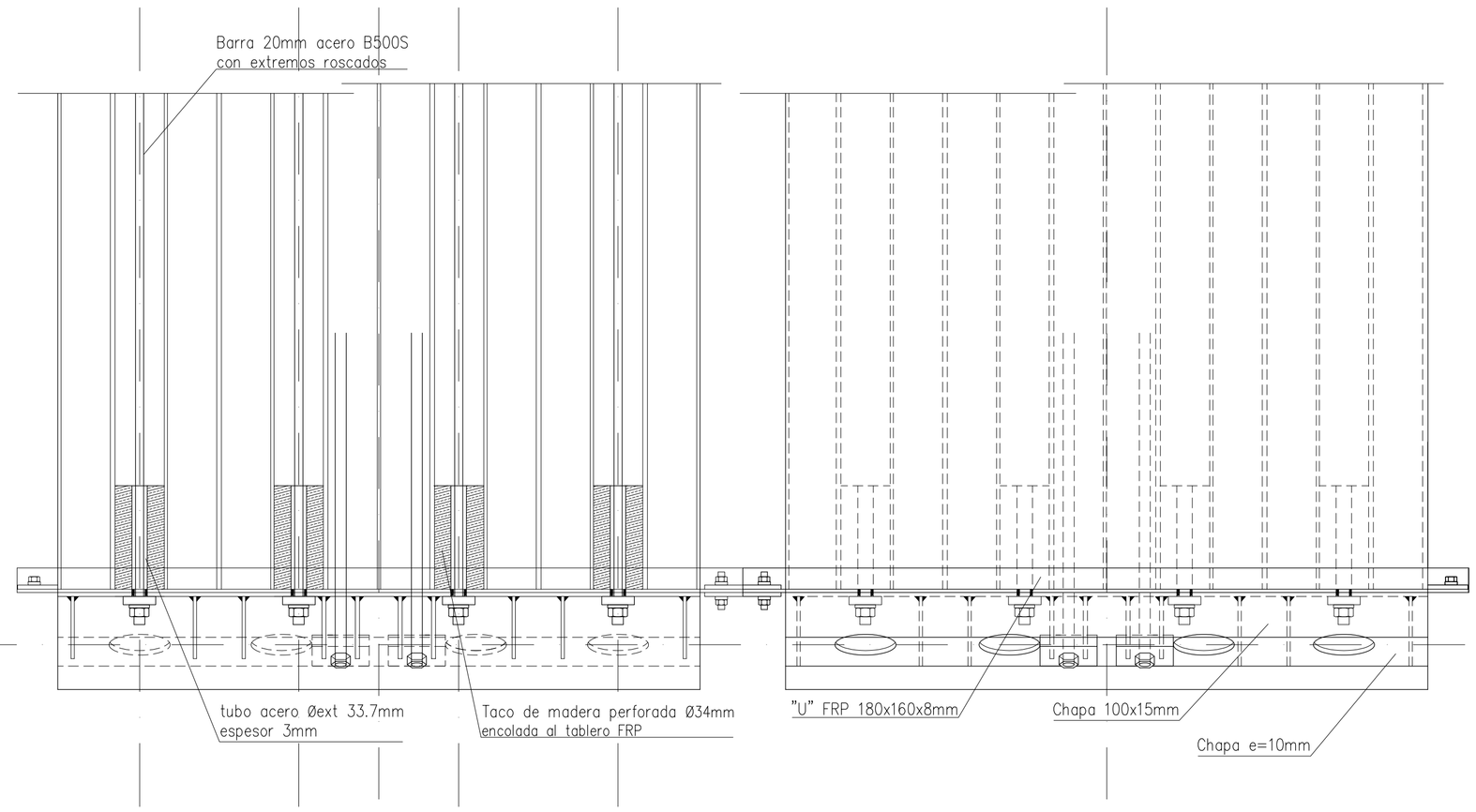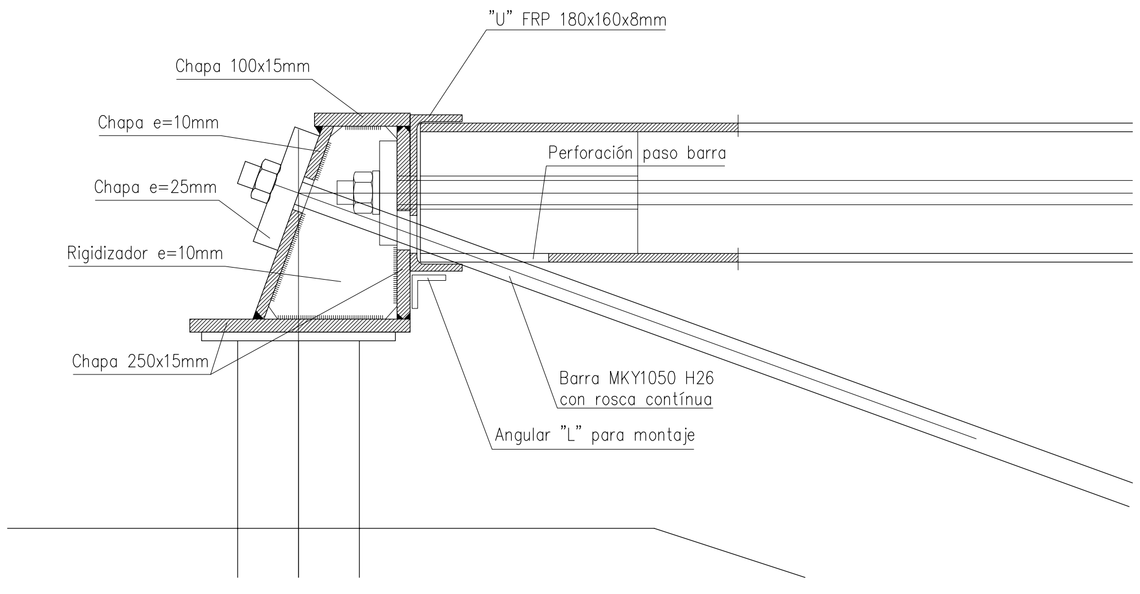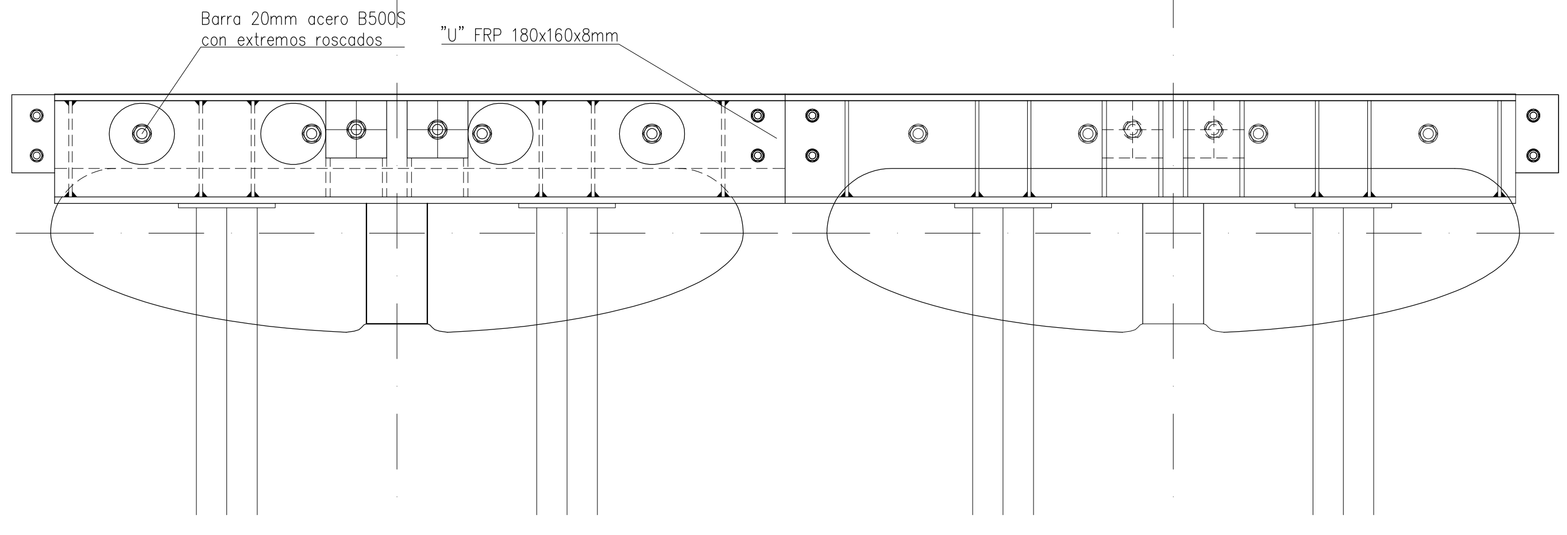
E 1:5